इंटरनेट मानक

Disclosure to Promote the Right To Information

Whereas the Parliament of India has set out to provide a practical regime of right to information for citizens to secure access to information under the control of public authorities, in order to promote transparency and accountability in the working of every public authority, and whereas the attached publication of the Bureau of Indian Standards is of particular interest to the public, particularly disadvantaged communities and those engaged in the pursuit of education and knowledge, the attached public safety standard is made available to promote the timely dissemination of this information in an accurate manner to the public.

"जानने का अधिकार, जीने का अधिकार"
Mazdoor Kisan Shakti Sangathan
"The Right to Information, The Right to Live"

"पुराने को छोड नये के तरफ"
Jawaharlal Nehru
"Step Out From the Old to the New"

IS 7561 (1992): Surgical instruments - Forceps, Gallstone, Desjardin's pattern - Shape and dimensions [MHD 1: Surgical Instruments]

"ज्ञान से एक नये भारत का निर्माण"
Satyanarayan Gangaram Pitroda
"Invent a New India Using Knowledge"

Act Number 22 of 2005
The Indian Parliament
RIGHT TO INFORMATION

Made Available By
Public.Resource.Org

"ज्ञान एक ऐसा खजाना है जो कभी चुराया नहीं जा सकता है"
Bhartṛhari—Nītiśatakam
"Knowledge is such a treasure which cannot be stolen"

BLANK PAGE

BRUTUM FULMEN

IGNORANTIA JURIS NON EXCUSAT

PROTECTED BY COPYRIGHT

(Reaffirmed 1998)

भारतीय मानक

शल्यक उपकरण – पित्ताश्म चिमटियां डेसजारडिन नमूने की – आकृति एवं आयाम

Indian Standard

SURGICAL INSTRUMENTS — FORCEPS, GALLSTONE, DESJARDIN'S PATTERN — SHAPE AND DIMENSIONS

(First Revision)

UDC 615·472·4 : 616·366-003·217·7-72

© BIS 1992

BUREAU OF INDIAN STANDARDS
MANAK BHAVAN, 9 BAHADUR SHAH ZAFAR MARG
NEW DELHI 110002

August 1992 **Price Group 1**

Surgical Instruments Sectional Committee, MHD 1

FOREWORD

This Indian Standard (First Revision) was adopted by the Bureau of Indian Standards, after the draft finalized by the Surgical Instruments Sectional Committee had been approved by the Medical Equipment and Hospital Planning Division Council.

This standard was first published in 1975. It has been revised so as to retain the requirements in respect of shape and dimensions only, as the common specification aspects for these types of forceps are covered in IS 3642 (Part 1) : 1990 'Surgical instruments — Specification: Part 1 Non-cutting, articulated instruments (*second revision*)' which would serve as a horizontal standard for these forceps. Accordingly, this standard takes the form of a vertical standard and is intended to be used in conjunction with IS 3642 (Part 1) : 1990.

For the purpose of deciding whether a particular requirement of this standard is complied with, the final value, observed or calculated, expressing the result of a test, shall be rounded off in accordance with IS 2 : 1960 'Rules for rounding off numerical values (*revised*)'. The number of significant places retained in the rounded off value should be the same as that of the specified value in this standard.

Indian Standard

SURGICAL INSTRUMENTS — FORCEPS, GALLSTONE, DESJARDIN'S PATTERN — SHAPE AND DIMENSIONS

(First Revision)

1 SCOPE

1.1 This standard specifies the shape and dimensions for Desjardin's pattern gallstone forceps used in abdominal surgery.

2 REFERENCES

2.1 The Indian Standard IS 3642 (Part 1) : 1990 'Surgical Instruments — Specification: Part 1 Non-cutting, articulated instruments (*second revision*)' forms a necessary adjunct to this standard.

3 SHAPE AND DIMENSIONS

3.1 The shape and dimensions of the Desjardin's pattern gallstone forceps shall be as shown in Fig 1.

3.2 Joint

The joint of the forceps shall be Box type conforming to **13.2.2** of IS 3642 (Part 1) . 1990.

3.3 Finger Loops

The finger loops provided shall conform to size No. 2 of Section 6 of IS 3642 (Part 1) : 1990.

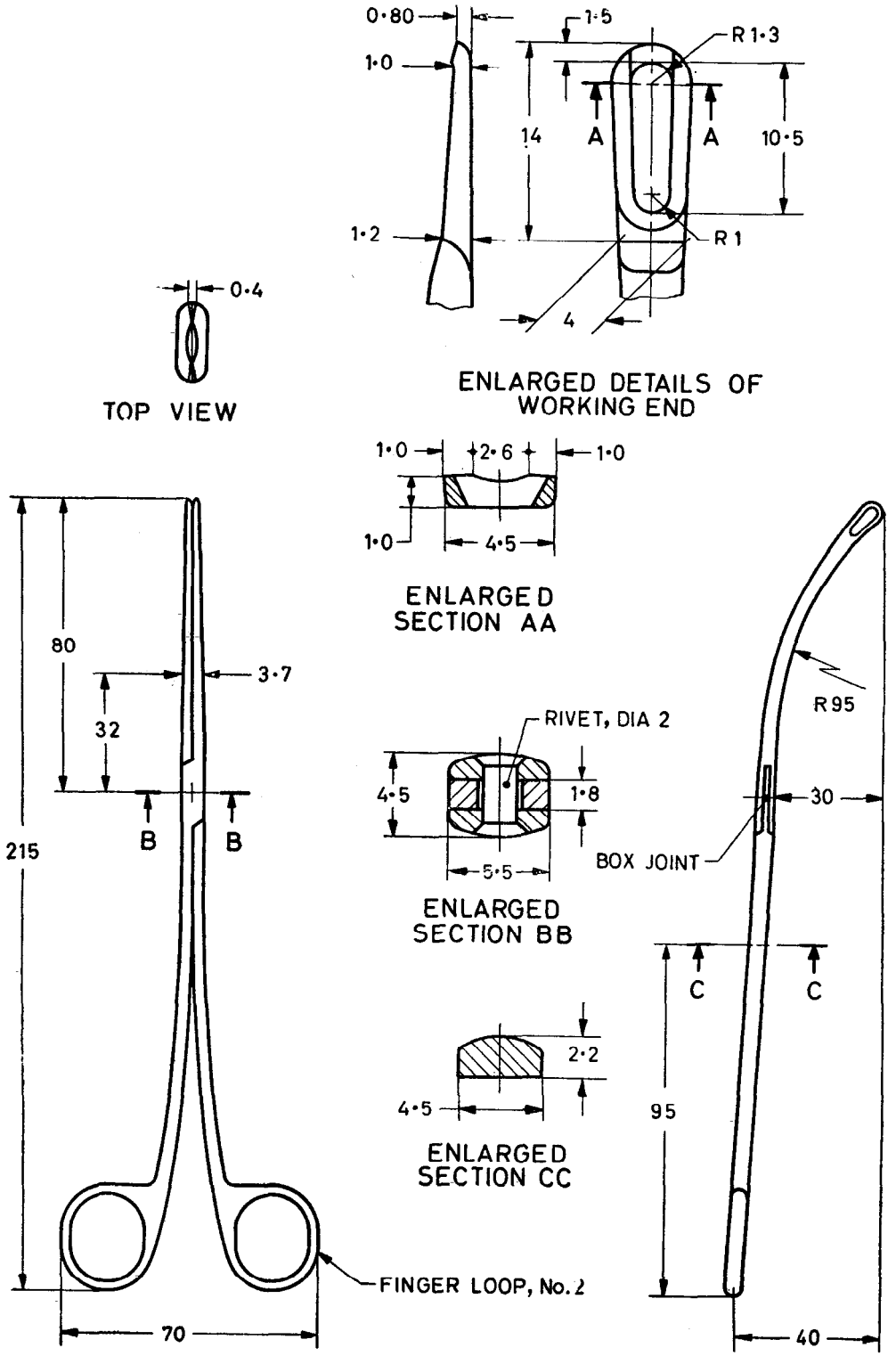

All dimensions in millimetres.

FIG. 1 FORCEPS, GALLSTONE, DESJARDIN'S PATTERN

Standard Mark

The use of the Standard Mark is governed by the provisions of the *Bureau of Indian Standards Act, 1986* and the Rules and Regulations made thereunder. The Standard Mark on products covered by an Indian Standard conveys the assurance that they have been produced to comply with the requirements of that standard under a well defined system of inspection, testing and quality control which is devised and supervised by BIS and operated by the producer. Standard marked products are also continuously checked by BIS for conformity to that standard as a further safeguard. Details of conditions under which a licence for the use of the Standard Mark may be granted to manufacturers or producers may be obtained from the Bureau of Indian Standards.

Bureau of Indian Standards

BIS is a statutory institution established under the *Bureau of Indian Standards Act, 1986* to promote harmonious development of the activities of standardization, marking and quality certification of goods and attending to connected matters in the country.

Copyright

BIS has the copyright of all its publications. No part of these publications may be reproduced in any form without the prior permission in writing of BIS. This does not preclude the free use, in the course of implementing the standard, of necessary details, such as symbols and sizes, type or grade designation. Enquiries relating to copyright be addressed to the Director (Publications), BIS.

Revision of Indian Standards

Indian Standards are reviewed periodically and revised, when necessary and amendments, if any, are issued from time to time. Users of Indian Standards should ascertain that they are in possession of the latest amendments or edition. Comments on this Indian Standard may be sent to BIS giving the following reference:

Doc : No. MHD 1 (2386)

Amendments Issued Since Publication

Amend No.	Date of Issue	Text Affected

BUREAU OF INDIAN STANDARDS

Headquarters:

Manak Bhavan, 9 Bahadur Shah Zafar Marg, New Delhi 110002
Telephones : 331 01 31, 331 13 75

Telegrams : Manaksanstha
(Common to all Offices)

Regional Offices :		Telephone
Central :	Manak Bhavan, 9 Bahadur Shah Zafar Marg NEW DELHI 110002	331 01 31 331 13 75
Eastern :	1/14 C. I. T. Scheme VII M, V. I. P. Road, Maniktola CALCUTTA 700054	37 84 99, 37 85 61, 37 86 26, 37 86 62
Northern :	SCO 445-446, Sector 35-C, CHANDIGARH 160036	53 38 43, 53 16 40, 53 23 84
Southern :	C. I. T. Campus, IV Cross Road, MADRAS 600113	235 02 16, 235 04 42, 235 15 19, 235 23 15
Western :	Manakalaya, E9 MIDC, Marol, Andheri (East) BOMBAY 400093	632 92 95, 632 78 58, 632 78 91, 632 78 92

Branches : AHMADABAD, BANGALORE, BHOPAL, BHUBANESHWAR, COIMBATORE, FARIDABAD, GHAZIABAD, GUWAHATI, HYDERABAD, JAIPUR, KANPUR LUCKNOW, PATNA, THIRUVANANTHAPURAM.

Printed at Printwell Printers, Aligarh, India